ZEN EVO 5000, 930 (BBBL), MEDIUM, GREY

- Very minimalistic/clean design
- High lumen output, perfect for the grocery and DIY retail sectors
- Highly efficient chip on board LED light source and segmented reflector for maximum efficacy
- Integrated, highly efficient electronic control gear in the track adapter
- Available in white, black and grey.

TECHNICAL SPECIFICATION

Product Code	369-03101520013
Colour	Grey
Control	On/off
CRI light colour	930 (BBBL)
Delivered lumen output lm	4800
Driver	Built in
EEI	A++
Light distribution	Medium
Lightsource	LED COB
Measurements A	162
Measurements B	194
Measurements C	222
Measurements D	128
Mounting	Track
Position	360°/90°
Lifetime	L80 B10, 50.000h
Protection	IP 20, class II
Start Time	Instant
System power W	40,7
Unit	mm
Weight	0,49

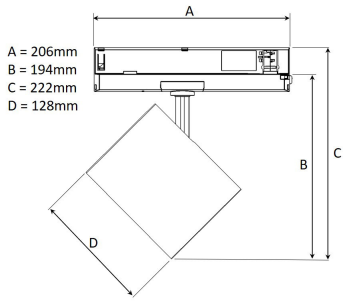

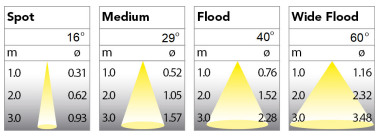

ITAB
Phone: +46 910 733 790
info@nordiclight.se

Please note that this product sheet is for a specific product and colour. The pictures may show examples of other available colours