ZYLINDER MICRO 1200, 930 (BBBL), WIDE FLOOD, BLACK

- Pure and minimalistic/clean design in a small size
- Four different beam angles for the light distribution
- Incorporated electronic control gear
- Highly efficient ‘chip on board’ LED light source
- Available in white, black and grey

TECHNICAL SPECIFICATION

Product Code	305-503-20
Colour	Black
Control	On/off
CRI light colour	930 (BBBL)
Delivered lumen output lm	1150
Driver	Built in
EEI	E
Light distribution	Wide flood
Lightsource	LED COB
Mains input voltage	220-240 V
Measurements A	166
Measurements B	60
Mounting	Track
Position	360°/90°
Lifetime	L80 B10, 50.000h
Protection	IP 20, class I
Start Time	Instant
System power W	15
Unit	mm
Weight	0.4

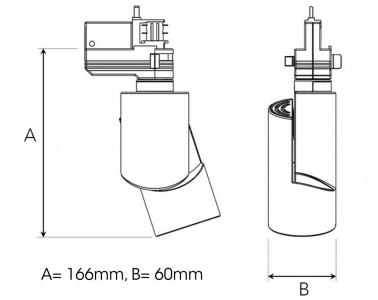

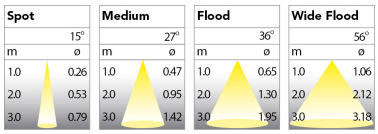

ITAB Lighting
Europe, Asia, Middle East
Phone: +46 910 733 790
info@nordiclight.se

ITAB Lighting
North America
Phone: +1 614 421 8419
na@nordiclight.se

Please note that this product sheet is for a specific product and colour. The pictures may show examples of other available colours